Product Specifications

L3 24-Port 100/1000BASE-X SFP + 4-Port 10G SFP+ Metro Ethernet Switch

MGSW-28240F

Version 3.0

Change History:

Revision:	Date:	Author:	Change List
3.0	2018/12/22	Calvin Chao	Main switch IC controller changed Firmware Update to Linux 4.4
1.0	2013/7/4	Norman Tsai	Initial release

Author	Calvin Chao	**Editor:**	Calvin Chao
Reviewed by:		**Approved by:**	Kent Kang

1. PRODUCT DESCRIPTION

10Gbps Fiber Ports and Multiple Dual Speed Fiber Ports Deliver High-speed Networking

PLANET MGSW-28240F L3 24-Port 100/1000BASE-X SFP + 4-Port 10G SFP+ Metro Ethernet Switch is specially designed for service providers and enterprises to deliver high-speed networking over longer distances. Its SFP ports can be connected to various fiber and Ethernet cables to extend switching functionality throughout the network. The MGSW-28240F is capable of providing non-blocking switch fabric and wire-speed throughput as high as 128Gbps in the temperature range from -10 to 60 degrees C without any packet loss and cyclic redundancy check (CRC) error. It greatly simplifies the tasks of upgrading the enterprise LAN for catering to increasing bandwidth demands.

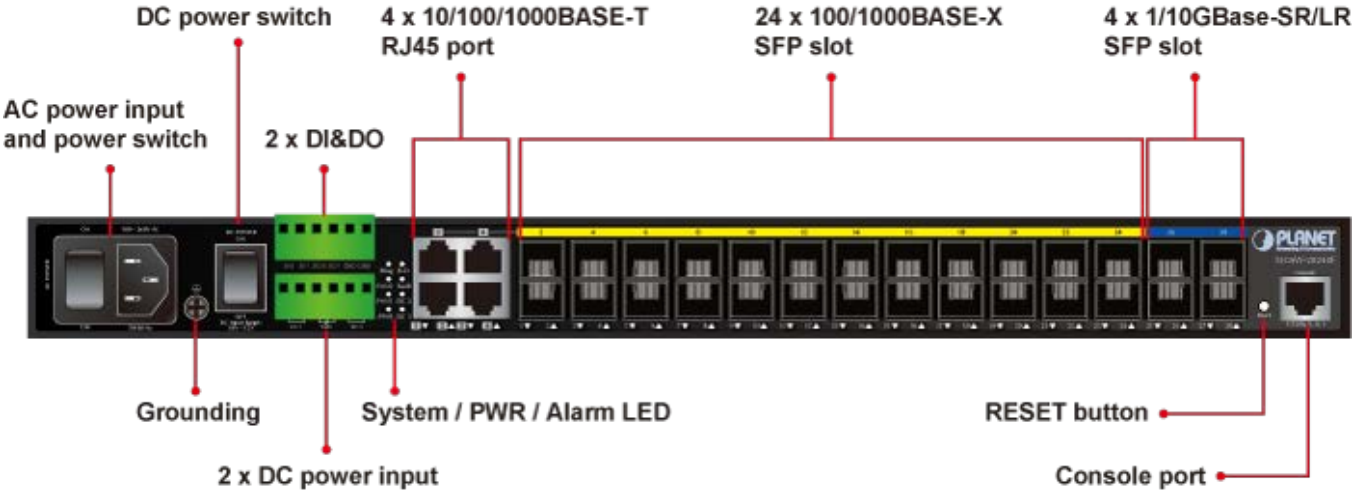

Layer 3 Routing Support

The MGSW-28240F enables the administrator to conveniently boost network efficiency by configuring Layer 3 IPv4/IPv6 VLAN static routing manually, and the IPv4 **OSPFv2** (Open Shortest Path First) settings automatically. The OSPF is an interior dynamic routing protocol for autonomous system based on link state. The protocol creates a database for link state by exchanging link states among Layer 3 switches, and then uses the Shortest Path First algorithm to generate a route table based on that database.

Cybersecurity Network Solution to Minimize Security Risks

The cybersecurity feature included to protect the switch management in a mission-critical network virtually needs no effort and cost to install. For efficient management, the MGSW-28240F is equipped with console, web and SNMP management interfaces. With the built-in web-based management interface, the MGSW-28240F offers an easy-to-use, platform-independent management and configuration facility. The MGSW-28240F supports SNMP and it can be managed via any management software based on the standard SNMP protocol. For reducing product learning time, the MGSW-28240F offers Cisco-like command via Telnet or console port and customer doesn't need to learn new command from these switches. Moreover, the MGSW-28240F offers remote secure management by supporting SSH, SSL and SNMP v3 connection which can encrypt the packet content at each session.

Redundant Ring, Fast Recovery for Critical Network Applications

The MGSW-28240F supports redundant ring technology and features strong, rapid self-recovery capability to prevent interruptions and external intrusions. It incorporates advanced **ITU-T G.8032 ERPS (Ethernet Ring Protection Switching)** technology, Spanning Tree Protocol (802.1s MSTP), and **redundant power** input system into customer's industrial automation network to enhance system reliability and uptime in harsh factory environments. In a certain, simple Ring network, the recovery time of data link can be as fast as 10ms.

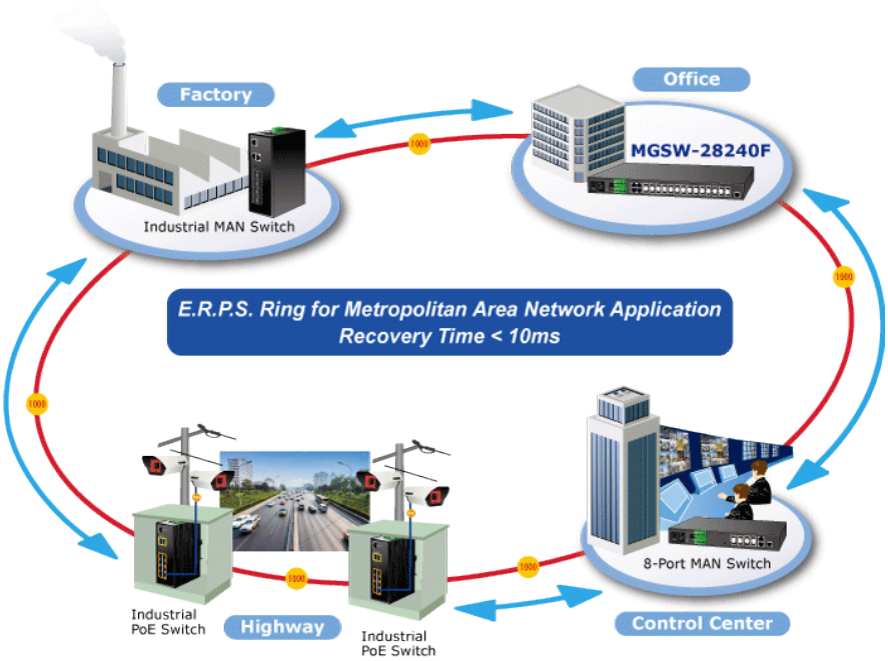

1588 Time Protocol and Front-access Interface Design

The MGSW-28240F is ideal for telecom and carrier Ethernet applications, supporting MEF service delivery and timing over packet solutions for IEEE 1588 and synchronous Ethernet. The Switch comes with a user-friendly front-access design to help technicians improve wiring and installation efficiency, whereas, in the traditional design, the power socket, console port and even some extension module were always placed on the rear of the product. When technicians are installing or maintaining the older switch model on the rack, they have to be careful with other surrounding online devices as the rear-end of the product cannot be seen clearly. With the front-access design, technicians can avoid messing with other nearby devices.

AC and DC Redundant Power to Ensure Continuous Operation

The MGSW-28240F possesses a **100~240V AC** power supply and dual **36~60V DC** power supply utilized as redundant power supply to ensure its continuous operation. Its redundant power system is specifically designed to handle the demands of high-tech facilities requiring the highest power integrity. Furthermore, with the 36~60V DC power supply implemented, the MGSW-28240F can be applied as the **telecom level** device and placed in almost any difficult environment.

Digital Input and Digital Output for External Alarm

The MGSW-28240F helps the network administrators efficiently manage the unexpected network situations by providing Digital Input and Digital Output for external alarm device on the front panel. The Digital Input can be used to detect and log the status of the external devices such as door intrusion detector. The Digital Output could be used to send alarm whenever the MGSW-28240F has port link-down or power failure.

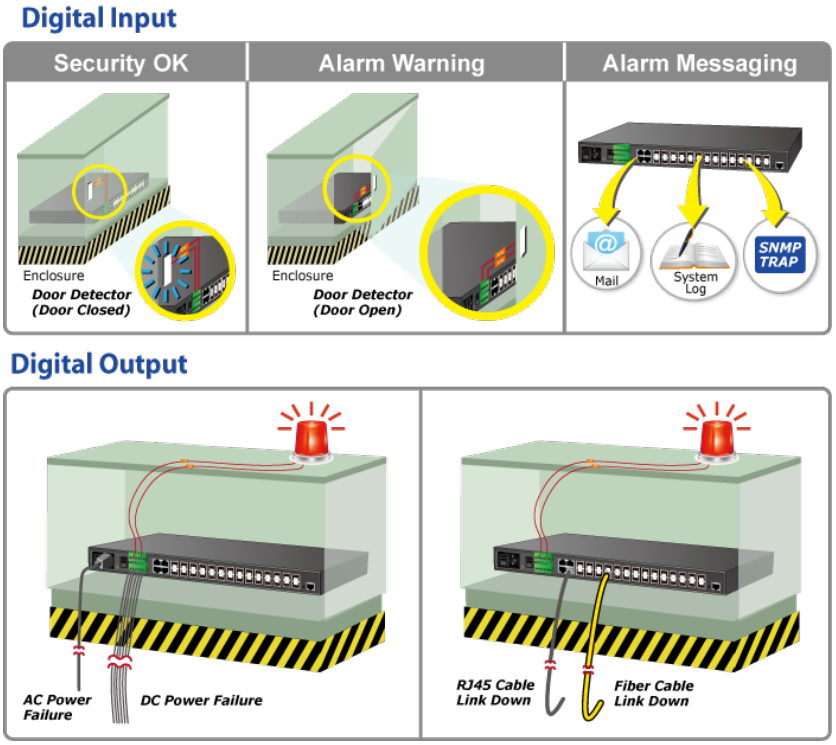

IPv6/IPv4 Dual Stack and Layer 2 Capability

Supporting both IPv6 and IPv4 protocols, the MGSW-28240F helps data centers, campuses, telecoms, and more to experience the IPv6 era with the lowest investment as its network facilities need not be replaced or overhauled if the IPv6 FTTx edge network is set up. The MGSW-28240F can be programmed for advanced switch management functions such as dynamic port link aggregation, **Q-in-Q VLAN**, private VLAN, **Multiple Spanning Tree Protocol (MSTP)**, Layer 2 to Layer 4 QoS, bandwidth control and **IGMP/MLD Snooping**. Via the link aggregation of supporting ports, the MGSW-28240F allows the operation of a high-speed trunk to combine with multiple fiber ports and supports fail-over as well.

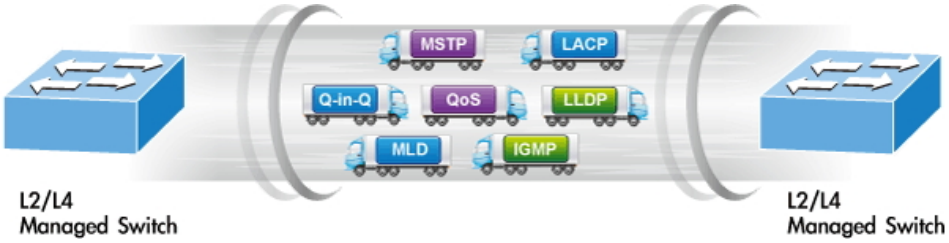

Powerful Security

The MGSW-28240F offers a comprehensive **Layer 2 to Layer 4 Access Control List (ACL)** for enforcing security to the edge. It can be used to restrict network access by denying packets based on source and destination IP address, TCP/UDP ports or defined typical network applications. Its protection mechanism also comprises **802.1X port-based** and **MAC-based** user, and device authentication. With the **private VLAN** function, communication between edge ports can be prevented to ensure user privacy. The MGSW-28240F also provides **DHCP Snooping**, **IP Source Guard** and **Dynamic ARP Inspection** functions to prevent IP snooping from attack and discard ARP packets with invalid MAC address. The network administrators can now construct highly-secure corporate networks with considerably less time and effort than before.

Excellent Traffic Control

The MGSW-28240F is loaded with powerful traffic management and QoS features to enhance connection services by telecoms and ISPs. The QoS features include wire-speed Layer 4 traffic classifiers and bandwidth limit that are particularly useful for multi-tenant units, multi-business units, Telco and network service providers' applications. It also empowers the industrial environment to take full advantage of the limited network resources and guarantees the best performance in VoIP and video conferencing transmission.

Flexible and Extendable 10Gb Ethernet Solution

10G Ethernet is a big leap in the evolution of Ethernet. Each of the 10G SFP+ slots in the MGSW-28240F supports **dual speed** and **10GBASE-SR/LR or 1000BASE-SX/LX**. With its 4-port, 10G Ethernet link capability and additional 4-port 1G Ethernet link capability, the administrator now can flexibly choose the suitable SFP/SFP+ transceiver according to the transmission distance or the transmission speed required to extend the network efficiently. The MGSW-28240F provides broad bandwidth and powerful processing capacity.

Intelligent SFP Diagnosis Mechanism

The MGSW-28240F supports SFP-DDM (Digital Diagnostic Monitor) function that greatly helps network administrator to easily monitor real-time parameters of the SFP, such as optical output power, optical input power, temperature, laser bias current, and transceiver supply voltage.

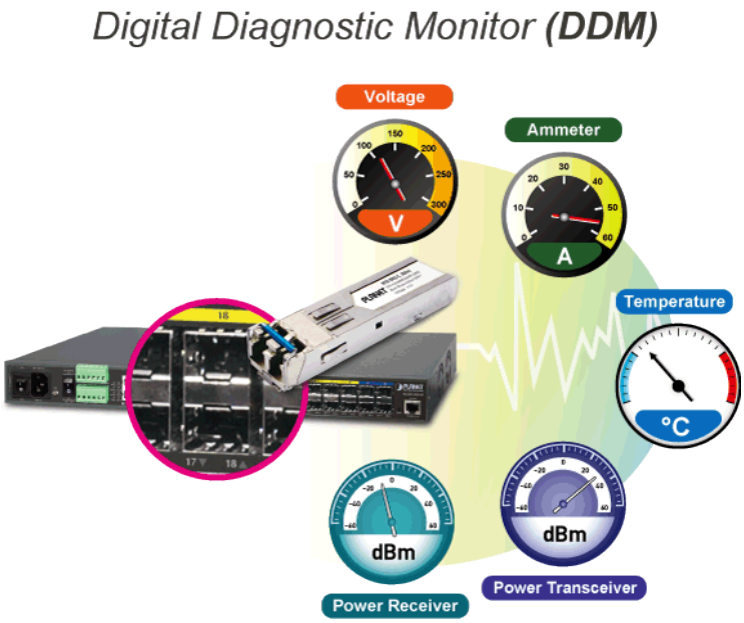

2. PRODUCT FEATURES

- **Physical Port**
  - **24 100/1000BASE-X SFP mini-GBIC/SFP ports**
  - **4 10/100/1000BASE-T RJ45 ports**, shared with Port-1 to Port-4
  - **4 10GBASE-SR/LR SFP+ slots**, compatible with 1000BASE-SX/LX/BX SFP
  - RJ45 to RS232 DB9 console interface for basic management and setup

- **Hardware Conformance**
  - One 100 to 240V AC or dual 36 to 60V DC power input, redundant power with polarity reverse protect function
  - 19-inch rack-mountable design
  - IP30 metal case
  - -10 to 60 degrees C operating temperature

- **Digital Input and Digital Output**
  - 2 digital input (DI)
  - 2 digital output (DO)
  - Integrates sensors into auto alarm system
  - Transfers alarm to IP network via email and SNMP trap

- **Layer 3 IP Routing Features**
  - IP dynamic routing protocol supports OSPFv2
  - Routing interface provides per VLAN routing mode
  - Supports maximum 128 static routes and route summarization

Layer 2 Features

- Store-and-forward architecture with runt/CRC filtering that eliminates erroneous packets to optimize the network bandwidth
- Storm control support
  - Broadcast/Multicast/Unknown unicast
- Supports **VLAN**
  - IEEE 802.1Q tagged VLAN
  - Up to 256 VLANs groups, out of 4096 VLAN IDs
  - Provides Bridging (VLAN Q-in-Q) support (IEEE 802.1ad)
  - Private VLAN Edge (PVE)
  - Protocol-based VLAN
  - MAC-based VLAN
  - IP subnet-based VLAN
  - Voice VLAN
  - GVRP
- Supports Spanning Tree Protocol
  - IEEE 802.1D Spanning Tree Protocol (STP)
  - IEEE 802.1w Rapid Spanning Tree Protocol (RSTP)
  - IEEE 802.1s Multiple Spanning Tree Protocol (MSTP), spanning tree by VLAN
  - BPDU Guard
- Supports Link Aggregation
  - 802.3ad Link Aggregation Control Protocol (LACP)
  - Cisco ether-channel (static trunk)
  - Maximum 14 trunk groups, with 16 ports for each trunk group
  - Up to 32Gbps bandwidth (full duplex mode)
- Provides port mirror (many-to-1)
- Port mirroring monitors the incoming or outgoing traffic on a particular port
- Loop protection to avoid broadcast loops
- Supports ERPS (Ethernet Ring Protection Switching)
- IEEE 1588 and Synchronous Ethernet network timing

Quality of Service

- Ingress Shaper and Egress Rate Limit per port bandwidth control
- 8 priority queues on all switch ports
- Traffic classification
  - IEEE 802.1p CoS
  - TOS/DSCP/IP Precedence of IPv4/IPv6 packets
  - IP TCP/UDP port number
  - Typical network application
- Strict priority and Weighted Round Robin (WRR) CoS policies
- Supports QoS and In/Out bandwidth control on each port
- Traffic-policing on the switch port
- DSCP remarking

Multicast

- Supports IGMP snooping v1, v2 and v3
- Supports MLD snooping v1 and v2
- Querier mode support
- IGMP snooping port filtering
- MLD snooping port filtering
- MVR (Multicast VLAN Registration)

Security

- Authentication
  - IEEE 802.1x port-based/MAC-based network access authentication
  - IEEE 802.1x authentication with guest VLAN
  - Built-in RADIUS client to cooperate with the RADIUS servers
  - RADIUS/TACACS+ users access authentication
- Access Control List
  - IP-based Access Control List (ACL)
  - MAC-based Access Control List (ACL)
- Source MAC/IP address binding
- DHCP Snooping to filter distrusted DHCP messages
- Dynamic ARP Inspection discards ARP packets with invalid MAC address to IP address binding
- IP Source Guard prevents IP spoofing attacks
- IP address access management to prevent unauthorized intruder

Management

- IPv4 and IPv6 dual stack management
- Switch Management Interfaces
  - Console/Telnet command line interface
  - Web switch management
  - SNMP v1, v2c, and v3 switch management
  - SSH/SSL secure access
- IPv6 address/NTP management
- Built-in Trivial File Transfer Protocol (TFTP) client
- BOOTP and DHCP for IP address assignment
- System Maintenance
  - Firmware upload/download via HTTP/TFTP
  - Reset button for system reboot or reset to factory default
  - Dual images
- DHCP relay and option 82
- User privilege levels control
- NTP (Network Time Protocol)

- Link Layer Discovery Protocol (LLDP) and LLDP-MED
- Network diagnostic
  - SFP-DDM (Digital Diagnostic Monitor)
  - Cable diagnostic technology provides the mechanism to detect and report potential cabling issues
  - ICMPv6/ICMPv4 remote ping
- SMTP/Syslog remote alarm
- Four RMON groups (history, statistics, alarms and events)
- SNMP trap for interface link up and link down notification
- System Log
- PLANET Smart Discovery Utility for deployment management

3. PRODUCT SPECIFICATIONS

3.1 MAIN COMPONENTS

Switch ASIC & Fiber PHY	VSC7448YIH-02	x 1
CPU	500MHz MIPS 24KEc CPU (integrated with VSC7448)	--
Gigabit Ethernet PHY:	VSC8504XKS-04	x 1
Flash:	NOR FLASH 64MB	x 1
RAM	512MBytes	x 1

3.2 FUNCTION SPECIFICATIONS

Product	**MGSW-28240F**
Hardware version	**3**
Hardware Specifications	
Copper Ports	4 10/100/1000BASE-T RJ45 auto-MDI/MDI-X ports, shared with Port-1 to Port-4
SFP/mini-GBIC Slots	24 100/1000BASE-X SFP interfaces, Compatible with 100BASE-FX SFP transceiver
SFP+ Slots	4 10GbBASE-SR/LR SFP+ interfaces (Port-25 to Port-28) Compatible with 1000BASE-SX/LX/BX SFP transceiver
Console	1 x RS232-to-RJ45 serial port (115200, 8, N, 1)
Switch Architecture	Store-and-Forward
Switch Fabric	128Gbps/non-blocking
Throughput	95.2Mpps@64Bytes
Address Table	16K entries, automatic source address learning and aging
Shared Data Buffer	32M bits
Flow Control	IEEE 802.3x pause frame for full duplex Back pressure for half duplex
Jumbo Frame	10K bytes
Reset Button	< 5 sec: System reboot > 5 sec: Factory default
Dimensions (W x D x H)	440 x 200 x 44.5 mm, 1U height
Weight	2.935kg
LED Indicator	System: AC (Green), DC1 (Green), DC2 (Green), Fault (Red) Ring (Green), R.O. (Green) 10/100/1000T RJ45 Interfaces (Port 1 to Port 4): 1000Mbps LNK/ACT (Green) 10/100Mbps LNK/ACT (Amber) 100/1000Mbps SFP Combo Interfaces (Port 21 to Port 24): 1000Mbps LNK/ACT (Green) 100Mbps LNK/ACT (Amber) 1/10Gbps SFP+ Interfaces (Port 25 to Port 28): 10Gbps LNK/ACT (Green) 1Gbps LNK/ACT (Amber)
Power Consumption	AC input: Max. 36.5 watts/125.2 BTU

	DC input: Max. 38.7 watts/132.7 BTU
Power Requirements – AC	AC 100~240V, 50/60Hz 1A
Power Requirements – DC	DC 36~60V, 1.2A
DI and DO	2 digital input (DI): Level 0: -24~2.1V Level 1: 2.1~24V Max. input current: 10mA 2 digital output (DO): Open collector to 24VDC, 100mA
EFT Protection	6KV DC
ESD Protection	6KV DC
Layer 2 Management Functions	
Port Configuration	Port disable/enable Auto-negotiation 10/100/1000Mbps full and half duplex mode selection Flow control disable/enable
Port Status	Display each port's speed duplex mode, link status, flow control status, auto-negotiation status, trunk status
Port Mirroring	TX/RX/Both Many-to-1 monitor
VLAN	802.1Q tagged VLAN Q-in-Q tunneling Private VLAN Edge (PVE) MAC-based VLAN Protocol-based VLAN Voice VLAN IP Subnet-based VLAN MVR (Multicast VLAN registration) Up to 256 VLAN groups, out of 4096 VLAN IDs GVRP
Link Aggregation	IEEE 802.3ad LACP/static trunk 14 trunk groups with 16 port per trunk group
Spanning Tree Protocol	IEEE 802.1D Spanning Tree Protocol IEEE 802.1w Rapid Spanning Tree Protocol IEEE 802.1s Multiple Spanning Tree Protocol
QoS	Traffic classification based, strict priority and WRR 8-level priority for switching: - Port number - 802.1p priority - 802.1Q VLAN tag - DSCP/ToS field in IP packet
IGMP Snooping	IGMP (v1/v2/v3) snooping, up to 255 multicast groups IGMP querier mode support
MLD Snooping	MLD (v1/v2) snooping, up to 255 multicast groups MLD querier mode support
Access Control List	IP-based ACL/MAC-based ACL Up to 256 entries

Bandwidth Control	Per port bandwidth control Ingress: 100Kbps~1000Mbps Egress: 100Kbps~1000Mbps	
Layer 3 Functions		
IP Interfaces	Max. 128 VLAN interfaces	
Routing Table	**Max. 128 routing entries**	
Routing Protocols	**IPv4 hardware static routing** **IPv6 hardware static routing** **OSPFv2 dynamic routing**	
Management		
Basic Management Interfaces	Console; Telnet; Web browser; SNMP v1, v2c	
Secure Management Interfaces	SSH, SSL, SNMPv3	
SNMP MIBs	RFC 1213 MIB-II RFC 1493 Bridge MIB RFC 1643 Ethernet MIB RFC 2863 Interface MIB RFC 2665 Ether-Like MIB RFC 2819 RMON MIB (Group 1, 2, 3 and 9) RFC 2737 Entity MIB	RFC 2618 RADIUS Client MIB RFC 2863 IF-MIB RFC 2933 IGMP-STD-MIB RFC 3411 SNMP-Frameworks-MIB RFC 4292 IP Forward MIB RFC 4293 IP MIB RFC 4836 MAU-MIB IEEE 802.1X PAE LLDP
Standards Conformance		
Regulatory Compliance	FCC Part 15 Class A, CE	
Standards Compliance	IEEE 802.3 10BASE-T IEEE 802.3u 100BASE-TX/100BASE-FX IEEE 802.3z Gigabit SX/LX IEEE 802.3ab Gigabit 1000T IEEE 802.3ae 10Gb/s Ethernet IEEE 802.3x flow control and back pressure IEEE 802.3ad port trunk with LACP IEEE 802.1D Spanning Tree Protocol IEEE 802.1w Rapid Spanning Tree Protocol IEEE 802.1s Multiple Spanning Tree Protocol IEEE 802.1p Class of Service	IEEE 802.1Q VLAN tagging IEEE 802.1X Port Authentication Network Control IEEE 802.1ab LLDP RFC 768 UDP RFC 793 TFTP RFC 791 IP RFC 792 ICMP RFC 2068 HTTP RFC 1112 IGMP v1 RFC 2236 IGMP v2 RFC 2328 OSPF v2 RFC 3376 IGMP v3 RFC 2710 MLD v1 FRC 3810 MLD v2 ITU G.8032 Ethernet Ring Protection Switching
Environment		
Operating	Temperature: -10 ~ 60 degrees C for AC power input -40 ~ 75 degrees C for DC power input Relative Humidity: 5 ~ 95% (non-condensing)	
Storage	Temperature: -40 ~ 80 degrees C Relative Humidity: 5 ~ 95% (non-condensing)	

3.3 PHYSICAL SPECIFICATIONS:

Dimensions:

440 x 200 x 44.5 mm, 1U height

Weight:

2.94kg

■ **Front Panel:**

■ **Rear Panel:**

■ **LED definition**

■ **System**

LED	Color	Function	
Ring	**Green**	**Lights**	Indicates that Ring state is in idle.
		Blinks	Indicates that the Ring state is protected.
R.O.	**Green**	**Lights**	Indicates that the switch is set to ring owner.
		Off	Indicates that the switch doesn't set to ring owner.
DC1	**Green**	**Lights**	Indicates that the Switch is powered on by DC1 input.
DC2	**Green**	**Lights**	Indicates that the Switch is powered on by DC2 input.
FAN1	**Green**	**Lights**	Indicates that the FAN1 has stopped.
FAN2	**Green**	**Lights**	Indicates that the FAN2 has stopped.
Fault	**Red**	**Lights**	Indicates that Switch AC/DC or port has failed.
PWR	**Green**	**Lights**	Indicates that the Switch is powered on.
		Blinks	Indicates the System is running under booting procedure.

■ **10/100/1000BASE-T interfaces for port1 to port24 SFP slot**

LED	Color	Function	
LNK/ACT	Green	**Lights**	Indicates the link through that SFP port is successfully established with speed of **1000Mbps**.
		Blinks	Indicates that the switch is actively sending or receiving data over that port.
		Off	Indicates that the SFP port is link down.
	Orange	**Lights**	Indicates the link through that SFP port is successfully established with speed of 10Mbps or 100Mbps.
		Blinks	Indicates that the switch is actively sending or receiving data over that port.
		Off	Indicates that the SFP port is link down.

■ **10/100/1000BASE-T interfaces (Shared Port1~Port4)**

LED	Color	Function	
LNK/ACT	Green	**Lights**	Indicates the link through that port is successfully established with 1Gbps.
		Off	To indicate that the port is link down
	Orange	**Lights**	Indicates the link through that SFP port is successfully established with speed of 10Mbps or 100Mbps.
		Off	To indicate that the port is link down

■ **10GBASE-SR/LR SFP+ interfaces for port25 to port28**

LED	Color	Function	
LNK/ACT	Green	**Lights**	To indicate the link through that SFP port is successfully established with 10Gbps
		Off	To indicate that the SFP port is link down
	Orange	**Lights**	To indicate the link through that SFP port is successfully established with 1Gbps
		Off	To indicate that the SFP port is link down

DI & DO Connectors:

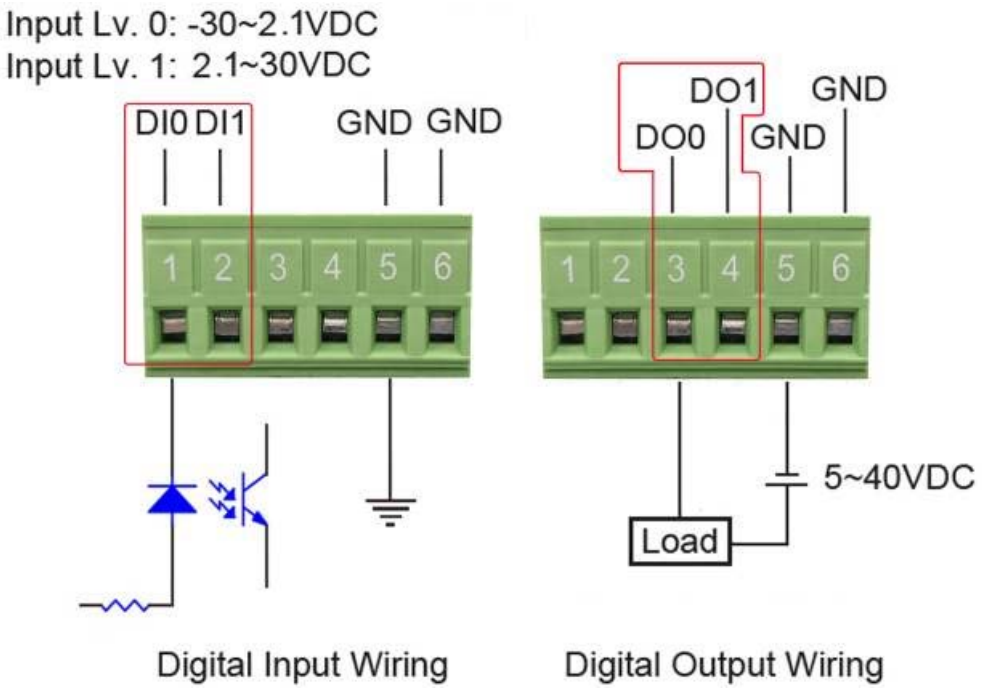

3.4 ENVIRONMENTAL SPECIFICATIONS

Operating:

Temperature: -10°C ~ 60 degrees C

Relative Humidity: 5% ~ 95% (non-condensing)

Storage:

Temperature: -10°C ~ 70 degrees C

Relative Humidity: 5% ~ 95% (non-condensing)

3.5 ELECTRICAL SPECIFICATIONS

Power Consumption Result:

DC Input(Full Loading)				AC Input(Full Loading)	
36V	48V	56V	60V	110V	220V
37.8W	35.6W	35.2W	38.7W	33.3W	36.5W
DC Input(No Loading)				AC Input(No Loading)	
36V	48V	56V	60V	110V	220V
15.9W	16.8W	17.2W	17.5W	15W	15.1W

3.6 REGULATORY COMPLIANCE

FCC Class A, CE

3.7 RELIABILITY

MTBF > 50,000Hrs

3.8 BASIC PACKAGING

- MGSW-28240F x 1
- Quick Installation Guide x 1
- AC Power Cord x 1
- DB9 to RJ45 RS232 Cable x 1
- Rubber Feet x 4
- Rack-mounting Kit x 1

3.9 PACKING INFORMATION

Box Dimensions (W x D x H):	554 x 308 x 95mm
Gross Weight:	3.62kg
Carton Dimensions (W x D x H):	595 x 525 x 350mm
Total Weight:	18.1kg
Quantity:	5pcs in one carton